S D McKellen

British Journal of Photography

'Father of the Modern Camera'

John McKellen

Foreword

As of 1996 I had little knowledge of my father's youth and family life. Roderick McKellen had died thirty years earlier and except for some comments on a taped interview that I had done with him prior to his death, the topic had not been much discussed. On that tape he made reference to the fact that his father had designed and made a camera which was in the Science Museum. While in London in 1996, I went to the museum to inquire about it. I was told that all the photography equipment had been sent to Bradford, so I was unable to see the camera at that time. Some years later when I retired, I decided to use my new free time and the internet to pursue the matter. Thus began my acquaintance with Samuel Dunseith McKellen, my grandfather the camera maker.

I was fortunate to have access to a well developed family tree which provided me with a structure for Samuel's family life. To supplement my knowledge of the family relationships and chronology I learned more about life in Manchester and other large cities in England of the mid and late nineteenth century. This awareness, coupled with my understanding of the difficulties encountered by a young person growing up without the consistent influence of a father, due to early death or frequent absence, resulted in a powerful sense of identification with my grandfather.

As I uncovered the major events of his personal life, a striking picture of his professional achievements and, regrettably, failures, emerged. As I searched further and more deeply for information about Samuel, I became increasingly aware that perhaps his role in the development of the camera has been generally overlooked, or at least, undervalued. In this article I will attempt to revive his professional prestige and, by examining what I know currently about his private life, imply some reasons as to why this shortfall in reputation might have occurred.

Samuel Dunseith McKellen

On Monday, 6 October 1884, the annual exhibition of the Photographic Society opened at 5a Pall Mall East in London. It would turn out to be a significant occasion. Comments made at that time indicate that important changes were occurring within the Society. The President of the Society, James Glaisher, made clear in his closing remarks that what had transpired at the meeting demonstrated those changes and he commented on what they might imply for the future. Mr Glaisher observed that, although the Society was not a professional organisation, for the first time most of the medals had been awarded to professionals. He added that he hoped this would be a temporary state of affairs and that the amateurs would soon regain their former position. However, he also stated that the increased interest in apparatus was excellent for the Society.[1]

The apparently contradictory sentiment expressed by the President in his speech can probably be traced back to age-old tensions between art and science, art and commercialism, and amateur and professional. This was not a new quandary for the Society. Formed in 1853, the Society's stated aim was the 'promotion of the art and science of photography.' That dual goal apparently has never changed but in 1884 the question was just what the balance between the two interests would be. The President's comments seemed to indicate a bias toward the amateurs and art.[1]

It was not until the early 1870s that the Society would take a step toward commitment to that branch of the photographic science called 'apparatus'. A first modest gesture, in 1871, was the introduction of a table on which members could display their inventions. No medals were awarded at that time, however.

A hint of the attitude (possibly the prevailing one) at the 1884 meeting toward those committed to the development of apparatus can be found in the 'Photographic Gossip' column in the contemporaneous issue of the Society's *Photographic Journal*. The writer, albeit possibly with tongue-in-cheek, comments with some amazement that there were so many people examining articles on the apparatus table who seemed to be knowledgeable and were involved in 'spirited' discussions about them![1]

One of the moves which indicated a change in attitude was the decision by the Society to award, for the first time, in 1884, a gold medal for apparatus. In light of the Society's apparent prior hesitancy to move forward in that direction, it seems ironic that the individual who provided such a dramatic impetus for change was a committed amateur photographer who originally developed his ideas solely with the goal of furthering his art. The events of the Society's 1884 meeting would change his life and virtually end his amateur status, even though he would continue his activities as a photographer and would exhibit photographs at future annual meetings of the

The Photographic Society's medal awarded to McKellen's camera – the first time the Society had awarded a medal for a piece of apparatus.

Society.

Within twenty years, developments in apparatus and processing would create a mass market for photography unimaginable in 1884. That short period of time would see the emergence of cameras that would enable an untrained person to snap pictures with an automatic camera that would fit easily into a pocket. One wonders what Society President Glaisher's reaction to these developments would have been.

A factor contributing to the increase of interest in apparatus in 1884 must have been the 1883 amendment to the Patent Act, which called for a significant reduction in fees charged for filing patents and a shorter initial term of four year's protection. Prior to the 1883 amendment, the high fees obviously discouraged investors and inventors alike, whereas the more encouraging requirements of the amendment certainly helped to stimulate the avalanche of commercial innovations which were to follow.

The ground-breaking award mentioned above, a gold medal (which was not actually presented at the meeting because the medals had apparently not been delivered in time), went to Samuel Dunseith McKellen, a jeweller and watchmaker by trade and an active amateur photographer, who had travelled from Manchester to London to attend his first meeting as a new member of the Society (he was elected a member on 11 November 1884) and to exhibit his recently patented camera.[1]

Apparently Samuel had been reluctant to exhibit, even though he had been demonstrating his camera to various photographic groups in the Midlands, including the Manchester Amateur Photographic Society, and had received a very enthusiastic response. Notwithstanding that encouragement, the prospect of going to London to exhibit with the leading inventors and manufacturers of the day must have been daunting. However, a direct solicitation by Mr E Cocking, the Secretary of the Society, convinced Samuel to attend.[1]

Contemporary reports indicate that the response to his camera was extraordinary.[1] As time passed, leading to the announcement of the awards, his expectations must have been raised. Certainly he exhibited confidence at the Technical Committee meeting, freely offering comments on other exhibits and demonstrating his own.

His design, according to Samuel, was the result of his own experiences as an amateur photographer, in which the labour and fatigue of a day's tramp with a half plate camera and a dozen plates were less than pleasant and deprived the results obtained of much of their value. Finally, exhausted, he determined to design a camera that would enable him to enjoy the art more fully.[2]

He therefore devised a set of principles that a perfect camera should incorporate: a) it should be light; b) it must be rigid; c) it must be easily erected and easily folded into a compact shape; d) it must allow for the shortest focus lens, but also allow for the use of a lens at least twice the length of the plate; e) it must be simple and repairable at a reasonable cost; and f) it must have a swing back and front, so that in using the swing back, the front may be adjusted parallel to it.[3]

In demonstrating his camera to the Technical Committee, he pointed out that, when shut, it was only 3 inches in thickness. The camera demonstrated was one designed for 15 x 12 inch plates; when later produced commercially it would be available in several sizes, the smallest to take a half plate. One of the 15 x 12 inch versions is in the collection of the Museum of Science and Industry, Manchester, and a smaller version is part of the collection at the National Museum of Photography Film & Television, at Bradford.

The three patents which made up the McKellen Treble Patent camera were all from 1884. Left to right: number 6688 showing the method of the collapsing the lens board into the camera; number 8463 showing the baseboard rails which allowed lenses of different focal lengths to be used; number 16,334 which allowed for horizontal swing. McKellen's fourth patent from 1884 number 319 described a method of attaching a tripod to the camera turntable on the base of the camera. This was also incorporated to his camera design.

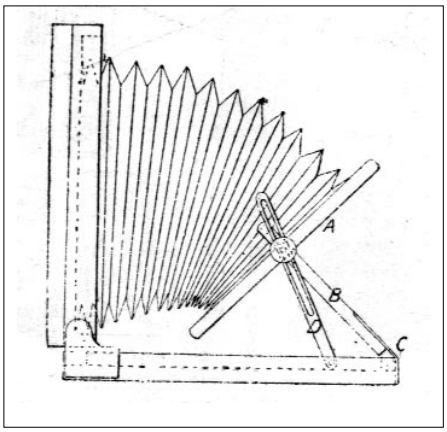

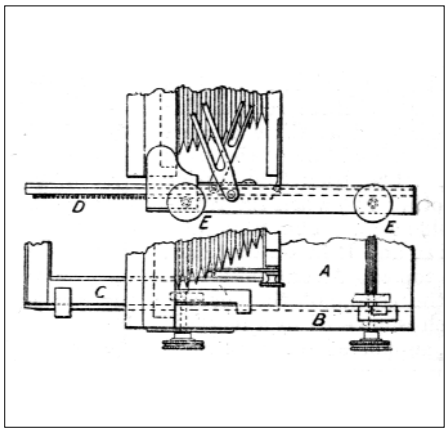

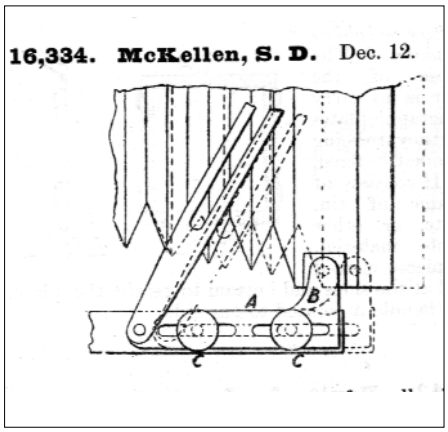

Laying the camera on its side, Samuel demonstrated that in a hole in its baseboard had been inserted a brass turntable, by which the camera was fixed to the tripod with brass pins. This allowed the camera to be swung in any direction without movement of the tripod, which remained solidly rigid.[2]

By raising and securing the front and back of the camera in position, the bellows body was extended 30 inches and retained the ability of further expansion. The design of the front, he pointed out, enabled placement of the lens in any position ,from top to bottom or from side to side. In addition, with a dark slide, three or four pictures could be taken on one 15 x 12 inch plate by covering up the other portions with blackened pieces of tin.[2]

The response of the audience at the Technical Committee meeting confirmed that the original principles Samuel devised for his camera had been 'amply fulfilled and the reception given of an enthusiastic character.' Payne Jennings, the Chairman of the Committee at that meeting, probably felt compelled, in the midst of overwhelming approval, to register a small criticism to the effect that there was one thing wanting and that was a side swing in the back. It is a measure of the confidence Samuel was undoubtedly feeling that he replied, perhaps somewhat cheekily, that he begged to differ from authority, but that he never used a side swing. However, he continued, if needed it could easily be added.[1]

Over one hundred years later, in describing the Treble Patent Camera, David A Davies stated that the camera was lighter and more versatile that any other field camera made prior, while just as rigid. He further commented that Samuel's innovations completely revolutionised camera design. They were copied and used in various forms by both amateurs and professionals for the next fifty years.[4]

There is some question as to whether Samuel, at the time of the meeting, was already manufacturing his camera for sale to the public. In the camera's manual, he writes that his motive for inventing it was purely non-commercial and driven by his love for photography. Photography had been Samuel's avocation since he made his first camera in the 1850s. However, a story circulated at the 1884 meeting suggested that he had almost missed the opportunity to exhibit, because the camera that had been set aside for delivery to the exhibition was unwittingly sold by a junior employee at his place of business.[1] This would suggest that Samuel was fully engaged in production and sale of the camera in 1884.

It is more likely that he had only one demonstration model at that time, which he was using also for his own photography. The evidence seems to indicate that it was the impetus of the Society's award and industry recognition that convinced the amateur inventor to set up a camera manufacturing business upon his return to Manchester after the meeting. There is no doubt that the expense involved in the construction of the prototype, consisting of numerous brass fittings and fine mahogany, not to mention expensive lenses, plates, etc., must have been considerable in those times. It can also be assumed that no expense was spared in choosing the best craftsman for the manufacture.

The original fabrication of the camera was done by Joshua Billcliff, a cabinet maker in Manchester who had built a photography studio for Queen Victoria at Windsor Castle in 1864 and also had earned a reputation for fine camera construction. Billcliff, however, was not totally convinced of the commercial potential and stability of Samuel's camera, feeling that it was too fragile and would not stand up to the rugged use for which the more heavily constructed land cameras of the day were designed.[4]

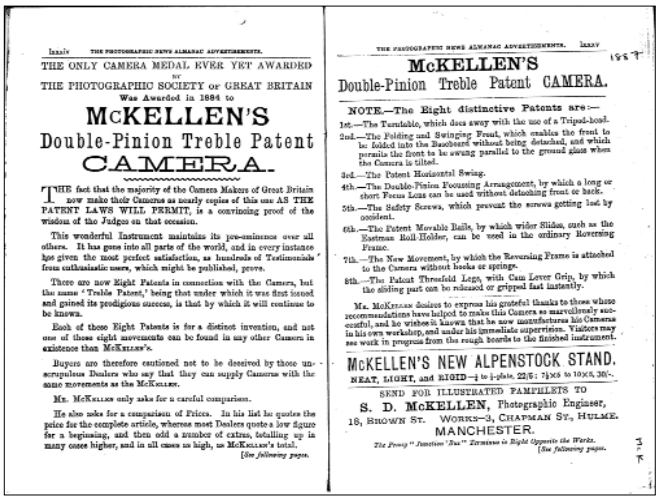
lxxxiv THE PHOTOGRAPHIC NEWS ALMANAC ADVERTISEMENTS.

THE ONLY CAMERA MEDAL EVER YET AWARDED BY THE PHOTOGRAPHIC SOCIETY OF GREAT BRITAIN Was Awarded in 1884 to

McKELLEN'S Double-Pinion Treble Patent CAMERA.

THE fact that the majority of the Camera Makers of Great Britain now make their Cameras as nearly copies of this one AS THE PATENT LAWS WILL PERMIT, is a convincing proof of the wisdom of the Judges on that occasion.

This wonderful Instrument maintains its pre-eminence over all others. It has gone into all parts of the world, and in every instance has given the most perfect satisfaction, as hundreds of Testimonials from enthusiastic users, which might be published, prove.

There are now Eight Patents in connection with the Camera, but the name 'Treble Patent,' being that under which it was first issued and gained its prodigious success, is that by which it will continue to be known.

Each of these Eight Patents is for a distinct invention, and not one of these eight movements can be found in any other Camera in existence than McKellen's.

Buyers are therefore cautioned not to be deceived by those unscrupulous Dealers who say that they can supply Cameras with the same movements as the McKellen.

Mr. McKellen only asks for a careful comparison.

He also asks for a comparison of Prices. In his list he quotes the price for the complete article, whereas most Dealers quote a low figure for a beginning, and then add a number of extras, totalling up in many cases higher, and in all cases as high, as McKellen's total.

[See following page.

THE PHOTOGRAPHIC NEWS ALMANAC ADVERTISEMENTS. lxxxv

1887

McKELLEN'S Double-Pinion Treble Patent CAMERA.

NOTE.—The Eight distinctive Patents are:—

1st.—The Turntable, which does away with the use of a Tripod-head.

2nd.—The Folding and Swinging Front, which enables the front to be folded into the Baseboard without being detached, and which permits the front to be swung parallel to the ground glass when the Camera is tilted.

3rd.—The Patent Horizontal Swing.

4th.—The Double-Pinion Focussing Arrangement, by which a long or short Focus Lens can be used without detaching front or back.

5th.—The Safety Screws, which prevent the screws getting lost by accident.

6th.—The Patent Movable Baile, by which wider Slides, such as the Eastman Roll Holder, can be used in the ordinary Reversing Frame.

7th.—The New Movement, by which the Reversing Frame is attached to the Camera without hooks or springs.

8th.—The Patent Threefold Legs, with Cam Lever Grip, by which the sliding part can be released or gripped fast instantly.

Mr. McKellen desires to express his grateful thanks to those whose recommendations have helped to make this Camera so marvellously successful, and he wishes it known that he now manufactures his Cameras in his own workshop, and under his immediate supervision. Visitors may see work in progress from the rough boards to the finished instrument.

McKELLEN'S NEW ALPENSTOCK STAND.

NEAT, LIGHT, and RIGID—½ to ½-plate, 22/6; 7½x5 to 10x8, 30/-.

SEND FOR ILLUSTRATED PAMPHLETS TO

S. D. McKELLEN, Photographic Engineer,

18, Brown St. Works—3, Chapman St., Hulme.

MANCHESTER.

The Prompt "Junction" Due" Terminus is Right Opposite the Works.

[See following page.

An 1887 advertisement extolling the virtues of McKellen's Treble Patent camera.

This opinion obviously was not shared by the members of the Society, as shown by the President's comments, later paraphrased by Samuel in the manual he wrote for the Treble Patent Camera:

> The Society has never till now seen its way to giving a medal for apparatus, but your Camera has in it so many new points, is so compact, so easily worked, so light, yet so firm, so simple in its movements, and is such a distinct stride in advance, that they felt constrained to grant a medal for it; and I congratulate you on having produced what may fairly be called THE CAMERA OF THE FUTURE. [1]

Considering the ground-breaking innovations of Samuel's invention, it is surprising that his name is virtually unknown to the photography community of 2001. However, looking back to a statement from his obituary, published in the *British Journal of Photography*, it seems clear that even in 1906 Samuel was largely forgotten: 'Many of the present generation may not be ware that Mr. McKellen was the father of the modern camera.'[5] This observation was made only twenty-three years after the high point of Samuel's career.

Biography

Samuel Dunseith McKellen was born in Northern Ireland, probably in County Antrim, in 1836, the third child of James and Margaret Dunseith McKellen. In 1837 the family emigrated to Manchester because James had secured the position of Superintendent and Missionary with the Manchester and Salford Mission, later the Manchester City Mission.

Evidence suggests that Samuel's parents were devoted non-conformists and that James was deeply committed to serving the poor, whose appalling living conditions in Manchester at that time have been well documented by Charles Dickens and other social critics, including Frederick Engels. There is little surviving documentation of the family's daily life, however it appears that James was absent from home for extended periods of time.

Fortunately Margaret was an independent and well educated woman, who brought determination and, apparently, financial resources to the marriage. She would support all seven children and would ensure that they received the best education available, given the family's situation.

Her role became even more pivotal in 1843, due to the untimely death of James at the age of 46 years. The cause cited on his death certificate was 'fever', a term used to cover many of the illnesses and diseases so prevalent in those years, especially amongst the people James McKellen served. He rests in a mass grave, containing over thirty persons (many of whom also died of 'fever') in what was the Rusholme Road Cemetery (known as 'The Dissenters' Cemetery') and is now an open space in Chorlton-on-Medlock near Manchester.

Samuel was seven years old when his father died; his mother never remarried. With the help of her oldest children, William and Martha, and with income from sub-letting rooms in the various houses in which the family lived, it appears that the family strove to move up to better neighbourhoods over the following years and that all the children received a solid basic education. It should be understood that state-funded schooling, now taken for granted, did not exist during those times.

Samuel was enrolled in a technical school, probably the Manchester and Salford Institute, where he received training as a watchmaker and jeweller. Upon graduation, following accepted practice, he was apprenticed to a craftsman. Unlike the apprenticeships of later times, in which the trainee would receive modest wages, in those days the master craftsman received payment from the apprentice's family for the instruction given.

Having completed his training as a watchmaker and jeweller, Samuel, at the age of 27, had opened his own business at 4 Brown Street in Chorlton-on-Medlock, according to Slater's *Directory* for 1861. He began securing patents for improvements to watches and clocks in the year 1863, notwithstanding the fact that at that time (as previously noted) patent application fees were extremely high.

In 1861 Samuel was living with his mother and his brothers and sisters at 8 Everton Road. It was around this time that he first became interested in the new science of photography, making his first camera from a cigar box and an optical lens. But he was to maintain his interest in watchmaking, a profession which at this time enabled him to meet the substantial costs of filing his first patent, explore his new interest in photography, and contribute to the family budget.

In 1865 Samuel married Jane Jones of Ormskirk and five years later their first child, John Dunseith McKellen, was born in Cheadle, near Manchester. The boy would later work with his father on photographic ventures and inventions. Later that year Samuel received a second patent, for an escapement mechanism improvement for watches. No evidence has appeared that any of Samuel's patents for watch improvements resulted in production.

Slater's *Directory* for 1871 shows that Samuel had moved his residence in Manchester to 92 Grosvenor Street and his watch business to 95 Market Street in Manchester. His commercial emphasis was still on the watch manufacturing and repair business. Apparently he regarded photography as an avocation and received no income from it.

Eliza Moult, probably photographed by S D McKellen, prior to their marriage in 1881.

Mention should be made of the role of his elder brother, William, who, as the first son, assumed a very important role in the family. After the death of their father, William appears to have played a supportive role throughout Samuel's life, including the loan of money on several occasions.

In 1873, a series of tragedies occurred that would alter the entire course of Samuel's life. Death was no stranger to Manchester and other urban areas, where medical services were minimal and contagion rampant. A daughter, Maud, born in Withington in 1873, died within a year, the cause of death indicated as 'abscess'. Two years later, in 1875, the birth of a son, his namesake Samuel, was followed quickly by the infant's death and within a year, the death from consumption of Samuel's wife Jane.

During that trying period, Samuel maintained his business at Market Street and filed a third patent for an improvement in electric clocks. There were additional deaths in the family, including that of his mother Margaret in 1880 at the age of 78. She was buried with Samuel's wife Jane and the deceased children in the Marsland Cemetery, Sale, in a family plot purchased by Samuel.

About this time another significant event occurred that would trigger important changes for Samuel. He met Eliza Moult of Mellor (then in Derbyshire and now in Cheshire). Eliza, daughter of the 'gentleman' owner of Mellor Hall, had received a first class boarding school education. She was trained in the arts, was an accomplished horsewoman and enjoyed all the other advantages of her 'station.' She also owned property in and around Mellor, a fact that was to be of no small consequence in their future relationship. Samuel and Eliza were married at Mellor in 1881; she was 33 and he 48 years of age. At Eliza's insistence John, Samuel's sole surviving child from his first marriage, went to live with his uncle William.

Samuel's financial position at the time of his second marriage was insecure, to say the least, there being outstanding loans. This was known to Eliza; in fact the matter was discussed in a pre-nuptial agreement, which would later be the basis of a legal action brought by Eliza.[6] However, in 1881 there appear to have been no substantial problems between them and with Eliza's apparently

McKELLEN'S
Automatic ROLLER SLIDE,

THE ONLY REALLY AUTOMATIC ROLLER SLIDE IN THE MARKET, comprises:

1st. Patent Automatic Stopping Arrangement, which locks the movement when the proper amount of Paper is wound off. NOTE.—Any other Roller Slide can be over-wound.

2nd. Automatic Recorder, which indicates the number of exposures.

3rd. Automatic Marker, which makes a distinct line across the Paper where the division between the Pictures occurs, by the act of drawing out the Slide Shutter.

4th. The Patent Gripping Roller, which allows the use of any make of Paper.

5th. The Double Tension, which allows the Paper to be re-wound on the Stock Roller.

6th. Space in Slide to carry extra Spools.

7th. Double Roller Arrangement, which enables 60 Exposures to be used without re-charging. This latter is only arranged to order.

THIS SLIDE IS ESPECIALLY ARRANGED TO TAKE EASTMAN SPOOLS, BUT WILL DO FOR ANY MAKE OF PAPER.

The Workmanship is exquisite, and the Slide is pronounced by Judges to be, "like McKellen's Camera," the best in the Market 'by far.'

PRICES—

Up to ½-Plate, £4; 7½×5, £5; 8½×6½, £6; 10×8, £7; 12×10, £8; 15×12, £9. SEE THESE BEFORE BUYING.

McKELLEN'S
AUTOMATIC ROCKER,

By which a Table receives a steady side-to-side rocking movement for about an hour with once winding up, and an even flow of the liquid is ensured.

The value of this Instrument in the Studio when many Plates have to be Developed at once, or in a short time, is apparent.

It is also valuable when Developing Plates which require long immersion in the Developer.

Price £2 10s. up to Whole-Plate. £3 10s. up to 15×12.

POLISHED PINE. WELL MADE.

McKELLEN & MUTH'S
PATENT
View Finder & Auxiliary Focusser

For ATTACHING to the CAMERA, GENERALLY at the TOP.

By this Instrument the correct focus of any object may be got, whilst the Slide is in the Camera, and the Shutter set ready for exposure.

From 30/- each.

WILL SHORTLY BE ON THE MARKET:— McKELLEN'S SHUTTER.

SOLE AGENTS FOR
Taylor's New Rectilinear Lenses,
Photographic Appliances of Every Description.
Chemicals, &c.

INVENTORS' IDEAS WORKED OUT ON MOST REASONABLE TERMS.

S. D. McKELLEN, Photographic Engineer,
18, BROWN ST. WORKS—3, CHAPMAN ST., HULME.
MANCHESTER.

1887 McKellen advertisement describing some of the other products that the company was manufacturing.

enthusiastic support, both moral and financial, Samuel began to plan seriously the development of a revolutionary camera design. Eliza's sketching abilities probably were very useful in the preparation of the descriptions and illustrations required for patent applications.

Samuel, using his engineering skills as a watchmaker, probably completed his new camera design in the years prior to 1882 and commissioned Joshua Billcliff to fabricate a working model . Having arrived at a satisfactory solution to any problems that were revealed by field trip tests, he then took the camera to various individuals and to photography groups, for demonstrations. Obviously, the word got around and interest built, resulting in the invitation to attend the exhibition and meeting to be held in London by the Photographic Society in 1884.[2]

When Samuel arrived back in Manchester from the London meeting, undoubtedly he was well received by photography enthusiasts and probably was offered support to establish what promised to grow into a major camera production company. At that time there were very few major companies making the commitment required to establish factories to produce enough cameras to meet the growing interest of the general public in photography. However, such expansion was inevitable and many developments, such as rolled film and snapshot cameras, would occur over the next twenty years.

To set up shop Samuel had a lot of organising to do, including the hiring of qualified carpenter/joiners and support workers, and the rental of larger premises. At the time he went to London, he had premises at 18 Brown Street.[4] There is very little documentation concerning this important period, but if we look at the overall picture of activity over the next four years, it does testify to Samuel's ability to manage the start up challenges. He also produced, on his return from the 1884 meeting, a manual for the Treble Patent Camera. It is probable that he was able, eventually, to meet the demand for the camera, although for whatever reason, the manual does contain a disclaimer indicating some delays in delivery.

Samuel seems to have had a very outgoing and social attitude. He apparently would, over the course of the next twenty years, spend many hours with his fellow photographers and camera makers and would travel to attend meetings of local societies, many of which he joined, including the Manchester Amateur Photography Society.[4] This activity, which would result in growing absences from the home, helped to create his reputation and increase business opportunities, but eventually would have a negative effect on his marriage and his sons.

One on-going problem was the situation of Samuel's son John, who was still living with Samuel's brother William. The costs of the boy's education, which would roughly mirror that of his father's - technical institute training followed by apprenticeship - were, unknown to Eliza, borne by Samuel and probably financed with money that Eliza contributed for Samuel's business expenses. Once Eliza realised this, it apparently became a matter of contention between them.

At the time Samuel went to London for the Exhibition in 1884, he and Eliza were living in Sale, then a suburb of Manchester, and had two sons, Arthur and Frederick. In 1885 a third son, Thomas, who would later assume the name surname Moult (his mother's maiden name), was born during a stay by his mother at Mellor Hall, where she went on the occasion of her mother's death. It is quite possible that at this time a reconciliation of Eliza with her family was achieved; apparently there was general family disapproval of her marriage to Samuel.

Samuel continued his activities as an amateur photographer and there are some existing photographs of Eliza and the sons taken by him. He himself does not appear in any of the photographs which have been found, except for a group photograph of the Derbyshire group, meeting in 1886.[7] Incidentally, William Walker, a representative of George Eastman, newly arrived in England, is also to be found in this group portrait. George Eastman was very interested in the developments taking place in Manchester and it is quite likely that the suggestion that Walker was seeking new ideas and alliances at that meeting has a basis in fact. This would confirm the recollection of Samuel's youngest son, Roderick, that Samuel was offered a position with the Eastman company. If so, nothing transpired therefrom.

A very important part of Samuel's story is the evidence of his personal creative commitment, as reflected by his consistency in patent applications for new inventions. By his death in 1906 he had secured in excess of twenty patents for improvements in cameras. An examination of the period 1884-1888 shows that fifty per cent of his lifetime output, including his most important work, was produced in those four years, his most creative period.

Another useful insight into his creativity and productivity can be gained by reviewing advertisements found in the *Year Book of Photography* of 1886. Although these ads might be regarded as not meeting the style and design of the competition, they do show us the range of products that Samuel produced during that period. It should be noted that the earliest advertisements found were contained in the1886 *Almanac*, but it is possible that Samuel advertised his products prior to that date.

Of special interest in the 1887 *Year Book of Photography* is the advertisement which includes a very broad description of the Treble Patent Camera and also makes reference to a new Changing and Developing Lamp. In that advertisement, Samuel goes to great

McKellen's six sons, photographed by S D McKellen in 1894. From left: Roderick, Victor, Seith, Tom, Fred and Arthur.

lengths to indicate that his current version contains newly patented items additional to the original camera, which, the advertisement claims, had been copied extensively by other manufacturers 'As the patent laws will allow'. Probably from the day the award was granted, Samuel's design had been copied and sold, and often the copies would not bear an identification of the manufacturer, for obvious reasons.

The most important publicity that Samuel was to receive was a review of his factory included in the 1 July 1887 issue of the *British Journal of Photography*. A journalist, in Manchester toured the Cotton Metropolis Jubilee Exhibition, took time to tour Samuel's factory, for which no address is provided. But the 1887 advertisement, referred to above, indicates 'works' as being situated at 3 Chapman Street, Hulme (opposite the Penny Junction Bus Terminus). The article is very complimentary, describing Samuel as 'the founder of the Manchester school of cameras,' making reference to the camera award, and crediting him with the invention of 'a number of ingenious wood working machines and cutters,' together with other labour saving devices driven by an Otto Gas machine in use at the premises. The article further notes that all the parts of the cameras were made at the plant and that high quality materials, such as morocco skins (for bellows) and choice mahogany, were used. The author went on to state that more than one hundred pieces of brass were used in the construction of each camera. The factory was a large establishment, employing thirty-five workers. The article also informs the reader that space, including a dark room, has been set aside for the free use of clients in the city office at 18 Brown Street , Manchester.

The costs of such a large operation must have been tremendous and there is some question as to how long it could have been sustained. At this point it is important to understand that prior to receiving the award Samuel was generally unknown to the photographic community, except for the narrow circle of enthusiasts who had been shown the demonstration copy of the camera. Therefore it seems unlikely, even given the extraordinary reception and publicity accorded him in late 1884, that his sales enabled him to recoup his start up costs and turn profit within a short period of time. The unauthorised use by other camera makers of his design elements must also have undercut his sales. This abuse of his patents evidently began in the earliest days of production and the use of his ideas continued well into the twentieth century, long after his patents had expired .[4]

It is possible that Samuel thought he could survive the competition, but it must have been an enormous strain on his financial resources to maintain an operation of the size described in the 1887 article. Despite the rosy picture drawn there, recorded events of the next few years indicate that things did not go well for Samuel or his family. It appears that he had been borrowing money in order to carry on his businesses (both as a watchmaker/jeweller and as a camera manufacturer). Part of his financing was supplied through the prenuptial agreement with Eliza, which provided that a portion of the income from her properties was to be paid to him for his business expenses. In 1888 Eliza took legal steps to have that agreement amended. This action, which took nearly a year, reduced considerably the access that Samuel had to Eliza's funds and further required him to repay outstanding debts he owed others.[6]

There are many other signs that things were not going well for the family. Samuel was absent from the home frequently, probably away on business, spending time in his workshop, or in the company of fellow enthusiasts. Later events revealed that in 1888 he borrowed money by mortgaging the rights, pending repayment to William Gill of the assumed debt plus interest, to three of the basic patents for his award winning camera. It appears that one of these three patents, that for the Double Pinion, had not been renewed and therefore had lapsed. This move to obtain further financing provided a very temporary alleviation of his mounting problems and undermined Samuel's attempt to control the widespread use and abuse of his most valuable patents. Until the sum was repaid, with interest, Mortgagee William Gill was entitled to license or produce cameras using the two active patents, collect all revenues or fees and apply such sums to the unpaid balance.[8]

Samuel's next attempt, in 1888, to bolster his position was to bring suits for patent infringement against two major competitors, Joshua Billcliff [9] and Thornton Pickard.[10] The surviving details about the results of these suits are thin, but in the Billcliff action it appears that the court issued an order against Samuel for costs. There was probably some form of settlement.

It should be noted that throughout the period from 1884 onward, Samuel had maintained his watch and jewellry retail store, which had expanded to include cameras and related equipment. It is not known how successful that business was nor how much attention Samuel accorded it, given the many distractions of his new focus.

In 1891 Samuel began an action against Thomas Emanuel Moult, to stop him from selling copies of Samuel's cameras and implying in promotional material that Samuel had made or supervised the making of the products. The testimony by Moult gives some interesting insights into Samuel's movements during the period concerned. Moult said that he was employed by Samuel in December 1890 to sell Samuel's products at 3 Chapman Street, the works being then located at 9 Chapman Street. In June of 1891, Samuel closed the shop at number 3 and Moult began working out of num-

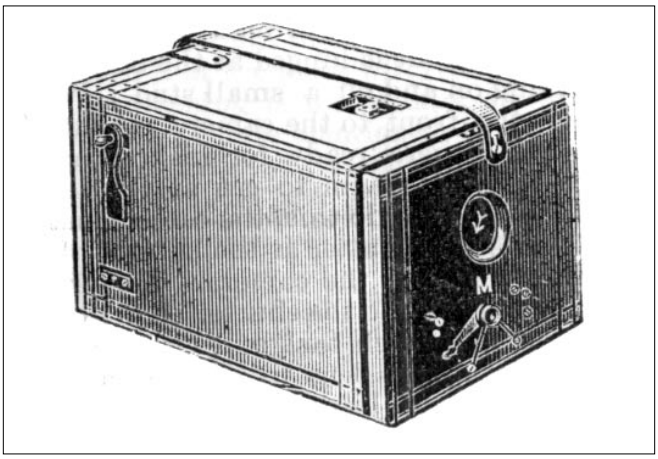

The Automatic MS Detector hand camera by McKellen from a review in the 1891 Photography Annual. The camera was offered by T E Moult as 'proprietor'.

ber 9. Later that year, in August, Samuel and Moult moved operations to 24 Trafford Street and Samuel 'left' later that month. It is assumed that Samuel had sold the cameras he had in stock, since after he left Moult contacted William Gill, who, as mortgagee of the patents in the Treble Patent camera, could license Moult to produce the cameras. He evidently did so and then Moult commenced to sell them.[8]

It is unknown whether the advertisements included in the *Amateur Photographers Annual* for 1891, which also refer to a new miniature camera named the 'Automatic Detector' and list Moult's name as agent, were issued at the time of Moult's employment with Samuel or during the period of the Gill licenses. If the latter, there appears to be ample justification for Samuel's actions, there being no clear statement as to who manufactured the cameras, but generous use of Samuel's name. Samuel's suit against Moult lasted for several months and the records include statements by Moult, testifying that Gill had previously licensed nineteen-plus uses of two of the three original patents for the Treble Patent Camera.[8]

In an affidavit given by Samuel in the case, he testified that he had sold his cameras worldwide and to such leading personalities of the day as the Princess of Wales and the Duchess of Anglesea, among 'others of title and position.'[8]

A search of the public records has not revealed the outcome of this action but the conclusion could be drawn that Samuel's position as a manufacturer in the industry would have to be based on new ideas and products - unless he could repay the outstanding debt to Gill. His control of the achievement that established him as a pivotal figure in the development of photography, the Treble Patent Camera, had slipped through his fingers.

There would be new ideas and products over the remaining fifteen years of his life, but Samuel's stability, both that of his professional and his personal life, appears to have been shaken. Probably to reduce living expenses, in 1890 the family had moved to a cottage in Mellor, but in circumstances that contrasted sharply with the living conditions the younger Eliza had enjoyed at nearby Mellor Hall. The property, 'Brook Lea,' was a gift from Eliza's brother-in-law Jonathan Jowett. Such a small house, with but three bedrooms upstairs, two rooms below, a scullery, and no inside facilities, obviously presented problems for the family which would eventually include six sons.

For the next several years the relationship between Eliza and Samuel appears to have grown very bumpy as the family increased in size. Victor was born in 1889 and the last son, Roderick (father of the author of this article), was born in 1891. About 1895 the family left Mellor and subsequently changed addresses many times, as Eliza tried to evade Samuel, who would leave and then return to find the family. A final split occurred in 1898. Over the years Samuel had kept in close touch with his first son John and probably moved in with him. We know that together they sought to rebuild the business; it would be several years before Samuel would have the opportunity to employ John on a full time basis.

Although it appears that Samuel had lost the ability to profit substantially from sales of his Treble Patent Camera, he invented and actually produced other saleable photographic equipment. At the 1886 meeting of the Photographic Society, he exhibited, in addition to an updated version of the Treble Patent Camera, a Patent Automatic Developing Rocker and Roller Slide and an Auxiliary Focussing and View Finder (a collaboration with Otto Muth). There is no indication that he received any more awards from the Society but he might well have retained some patents, notwithstanding the mortgaging in 1888 of the Treble Patent Camera patents. Advertisements in 1887 referred to additional products, including his New Alpenstock Stand and the New Changing and Developing Lamp.

During this difficult period Samuel continued to create new improvements for cameras. After securing a patent for it earlier in 1888, he evidently licensed Marion and Company of London to sell a 'Detective Camera'. It has not been established who actually manufactured the camera as there is some doubt as to whether Samuel still maintained a factory at that time. Nevertheless, it is probable that he maintained quality control over the production. There are also open questions as to the duration of the agreement with Marion and its exclusivity, due to the fact that within a few years the camera would be advertised for sale by another company, with which Samuel would later form a relationship.

The surprising aspect of the Detective camera is that it does not seem to have received either the enthusiastic reception given to the Treble Patent Camera, or the very positive reviews accorded the Infallible (to appear in 1889), despite the fact that the Detective Camera apparently was the first camera to be manufactured incorporating the technology that would form the basis for the single lens reflex camera we know today. In his patent application Samuel acknowledged that 'this method of focussing by means of an oblique mirror was adapted many years ago by a Mr Sutton' and he also referred to 'the Curtain Shutter' developed by Mr B J Edwards.

Samuels' design, however, appears to be the first to combine the shutter with the mirror, to enable the photographer to see the exact image through the lens in the instant before the shot was taken, now a commonplace feature of modern reflex cameras. There is no indication that Samuel made any claims in pursuit of protecting his patent but undoubtedly there are countless examples that would

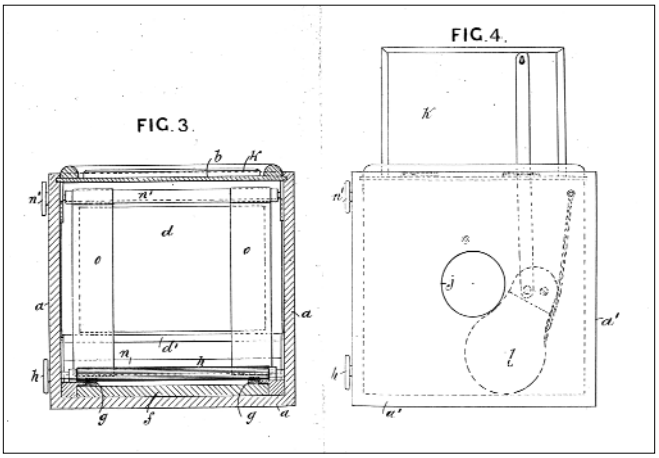

McKellen's patent drawings of 1888 for his Detective camera. The key design feature here, and one which arguably had more longterm impact on the camera design than his field camera, was the inclusion of an oblique mirror reflecting an image on to a ground glass screen on the top of the camera. The mirror moved out of position for exposure. A roller blind shutter was mounted in front of the mirror. McKellen gave due acknowledgement to Thomas Sutton who had designed a similar reflex camera in 1861.

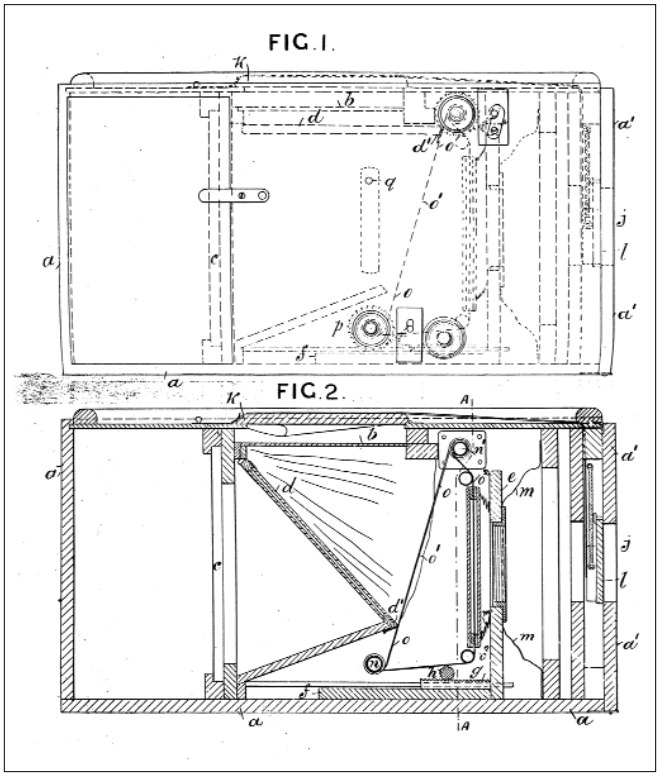

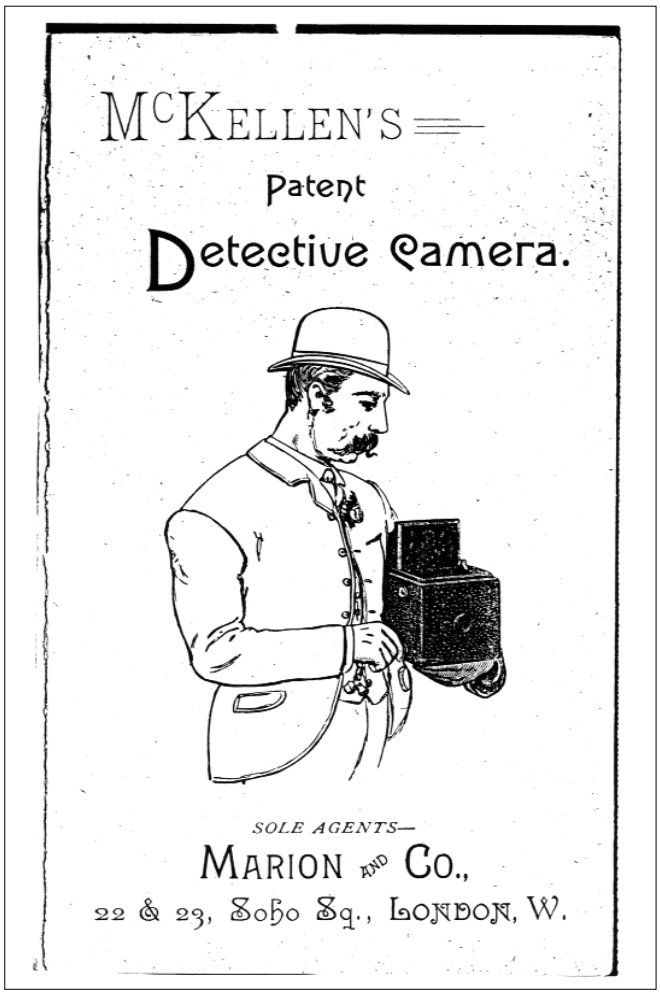

show use of the idea by other camera makers over the next years.

In some histories of camera development Samuel has received credit for his inventions, particularly those used in the Treble Patent Camera, with its great implications for miniaturisation and flexibility. But there has not been general acknowledgement of the ideas and execution he used in the manufacture of the Detective Camera,[11] which may have had an even more profound impact on the development of modern photography. It is hoped that further research will clarify the situation and that appropriate credit will be assigned, if it is indeed due. In the following year,1889, the Infallible Camera, which included the shutter/mirror technology used in the Detective camera, made its debut.

Probably the many questions raised here about the pattern of Samuel's business practices will never be answered. However, one thing is clear - for the rest of Samuel's life he would struggle to survive professionally. There were further desperate attempts to regain his position in the industry. By 1890, however, the number of opportunities for obtaining financing must have been severely reduced.

The industry was dynamic, with new inventions appearing with regularity. The influence of George Eastman was taking hold and over the next ten years would be a substantial force in stimulating the general public's interest in photography and its demand for user-friendly cameras.

However, Samuel persisted and in the mid 1890s his name, in the unusual role of General Manager, would appear in advertisements and reviews in 1896 and 1897 for Thompson and Co, featuring his Infallible Camera, his Patent Lever Safety Shutter, and the Treble Patent camera.[12] Regarding the latter, it is assumed that he had cleared his obligation to Gill and was able to transfer the rights to Thompson. During the period of Samuel's association with Thompson, the Infallible Camera and other items received very

complimentary reviews [12] and probably it is safe to say that Samuel's reputation as an inventor and craftsman continued, untarnished by the business missteps. How and why the association with Thompson ended is unclear, but Samuel reassumed his individual status sometime in 1897/8 and had a stand at the 1898 International Photographic Exhibition, referring to his company as 'McKellen & Co, formerly Thompson and Co'. At that time he was situated at 4 Bull's Head Yard, with works at Seven Stars Court, Greenwood Street, Manchester.

As indicated above there was a rewarding response to the View Finder (1886) and to the Infallible Camera (1889). And 1899 would see new products, the Cathedral Camera, promoted as the world's smallest camera, and the McKellen - Heywood Pocket Folding View Finder and Meter. An article devoted to several of his products appeared in *The Optician and Photographic Journal* of March 30, 1899. Photographs were included, indicating that once again Samuel was manufacturing, although on a smaller scale than before and at a new address, Mill Street, Millgate, Manchester.

Also in 1899 Samuel announced a collaboration with the Kershaw brothers, the inventors of a successful Roller Blind Shutter, which had been used in conjunction with the Treble Patent camera. The project was described as 'assisting in the production of the McKellen Triple Action Roller Blind Shutter.' There is no further information available about this project.[13]

Having apparently severed his connection with Thompson and established a base for continuing his own business, Samuel, as usual unpredictable, took an unexpected step in 1899 and formed a public company, a move he apparently had not made before. He assembled a board of directors, headed by an Alderman, Richard Lovett Reade, and the company sold shares to approximately thirty-two persons. In the formation agreement Samuel and his son John were awarded employment contracts, for five and three years, respectively. [14]

Samuel and John brought into the company four patents only, for items which appear not to have been in manufacture at the time. This raises questions about the basis for the new public company and reflects back to the termination of the arrangement with Thompson. Did Samuel leave with Thompson those patented items manufactured during the term of their agreement? If so, on what basis? Royalty or a buy-out? There is no stated intention in the public company formation agreement that proceeds from previous patents would flow into the new company. And, assuming that the founders of the public company were relying on the proven success of Samuel as a camera maker, it seems odd that one of the four patents was not for camera equipment, but for a bicycle improvement. However, there is evidence that in company with his son John, Samuel was working on new applications for uses in a variety of products, including fire grates, safes, thief and fire alarms and railway equipment. Some of those inventions resulted in patents.

When the public company was launched, Samuel forecast, with huge optimism, that he expected the company to make a twenty-five per cent profit in the first year, notwithstanding the start up costs and a planned move to larger premises at 165 Long Millgate, Manchester. In addition, Samuel announced that he would close his retail store so that he could devote more time to inventions.

In the second report to stockholders, issued March 13, 1900, some trouble was already apparent. John McKellen's occupation had changed from that of 'Photographic Camera Manufacturer' in the March 1899 list of stockholders, to 'Optician's Assistant' in the second listing.[14] There could be many reasons why John's recognised status changed so radically but it certainly signals some shift in the relationship between Samuel and his son and may imply a lack of confidence in the viability of the company.

A new invention, the Phoenix Hand Camera, was produced for sale in 1900.[15] But sadly, within a very short time, the public company would fold and it appears that in 1901 the assets were sold to an R H Risk, who announced he would carry on business at the same address.[16] Seemingly undeflatable, Samuel once again informed the press that he was starting a new venture and was in the process of designing a 'new high class cheap camera' to be named 'The Mac.'[17] There has been no evidence that The Mac was ever produced. Samuel continued to secure patents and issued notices of the opening of new premises at 24 Market Place in the centre of Manchester.[17] Samuel, in his late 60s, making yet another fresh start. But he would never regain his position in the industry as an innovator and leader.

As mentioned above, Eliza, with the six boys, had made concerted efforts to get away from Samuel. But he would continue to have contact with those of his sons who visited him at his shop. The most frequent visitors were his fourth son Samuel, known as Seith, and his youngest, Roderick. Seith followed in his father's footsteps in terms of a lifelong interest and career in engineering and Roderick developed a friendship with his half brother John.

Eliza did not forbid such contacts, although she constantly criticised her husband, especially regarding his neglect of her in favour of his friends. Samuel was perhaps not unusual in this regard. It was common in those days for men to frequent public houses on the weekends and in that environment they maintained a separate existence which often excluded wife and family.

Samuel's third son, Thomas Moult, later became a recognised writer, poet and journalist and he wrote of his youth and family in his semi autobiographical novel, *Saturday Night*, which was published in 1931, six years after the death of his mother.

In the early 1900s Samuel was apparently once again in need of money and made an appeal to his wife, through his sons, to return to the family. However Eliza was adamant and the boys, who must have felt very torn between their parents, were very supportive of their mother, recognising the efforts she had made to keep the family going.

On December 26, 1906, Samuel died in a Manchester hospital. When news of his death reached Eliza she did not exhibit any signs of regret and, according to Roderick, when she received a bill for the burial expenses, she tore it up. Nor did other family members seem to take an interest. It appears that Samuel had worn out his welcome. There seems to have been no effort by his brothers or sisters to give him an appropriate burial. Years before Samuel had purchased a plot for his first wife and three children. It was used also for his mother and two other relatives. Yet Samuel was not buried there. His firstborn, John, purchased a separate grave site close by.

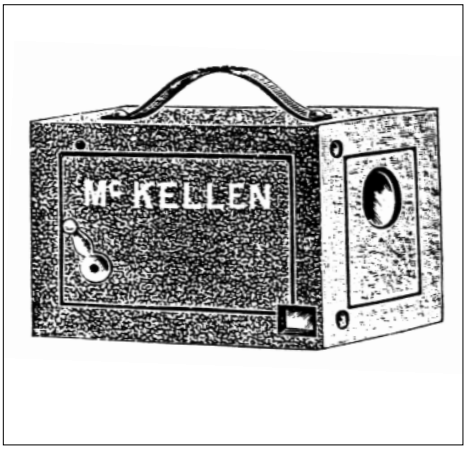

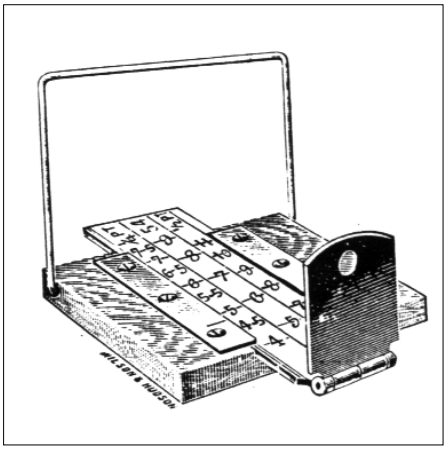

Infallible Automatic Magazine hand camera of 1898, an improvement on an earlier model, and the McKellen-Heywood Pocket Folding View Finder and View Meter.

But there was recognition and appreciation accorded in some quarters, as evident from this obituary in the *British Journal of Photography*, 11 January 1907:

> Death of Samuel Dunseith McKellen
>
> It is with much regret that we have to announce the death of Mr. S.D. McKellen, of Manchester, which took place on December 26th shortly after an operation for a serious internal complaint. The present generation of photographers may or may not be aware of the fact that Mr. McKellen was the father of the modern camera. Photographers of twenty years ago will well remember the advent of the McKellen camera in 1884, when it obtained the first medal for apparatus ever offered by the Photographic Society of Great Britain (now the Royal Photographic Society) and how it entirely revolutionised the construction of this instrument.
>
> Mr. McKellen first commenced photography upwards of 50 years ago with a cigar box and spectacle lens as his apparatus. Since then his photographic experiences with the wet plate apparatus—-where a pony and cart had to be obtained to carry one's paraphernalia about, and later with a 15" by 12" McKellen camera and three double slides (before the days of small plates and subsequent enlarging)—-were always worth listening to and one can only think that they were enthusiasts in those days. Mr. McKellen was 70 years of age at the time of his decease.

A last word. Samuel Dunseith McKellen was obviously a very complicated and conflicted person. His life seems to fall into two distinct periods, the first beginning with his birth in Ireland, and followed by emigration with his family to Britain, the loss of his father when Samuel was only seven, his first marriage and subsequent loss of wife and two children, and ended by the death of his mother, who had been his protector and supporter. The second began when he met and married Eliza, to be followed quickly by achievement, public recognition and heady participation in the whirlwind that was the photography industry of the late 1800s. The second period demanded business skills that Samuel apparently did not possess. It might be assumed that he had an innate mistrust of delegating responsibility and was therefore unfit to head a large operation. In his personal life, Samuel fathered six sons but could not, or did not, provide the consistent attention and influence which that role required.

This energetic and creative life did not end well; Samuel died penniless and, it seems, friendless. Since 1906 Samuel Dunseith McKellen has rested in an unmarked grave in the Marsland Cemetery, in Sale, near Manchester.

References and notes

1. Readers interested in further details of the 1884 meeting in London may consult the following publications: *British Journal of Photography*, 31 October and 14 November 1884; *Photographic Journal*, 28 November 1884.
2. The manual prepared by Samuel D McKellen for sale with his Treble Patent Double Pinion Camera.
3. Advertisement in the *Year Book of Photography* advertisements 1886.
4. Davies, David A, 'The Manchester Camera Makers, 1853-1940', The Photographist, Winter/Spring 1986.
5. Obituary of Samuel D McKellen, *British Journal of Photography*, 11 January 1907.
6. Eliza McKellen vs Wm Henry McKellen, John Moult, Samuel D McKellen and Frederick Appleby, 21 June 1888, Public Records Office PL31/563-64484.
7. *British Journal of Photography,* 3 June 1904.
8. McKellen vs Thomas Emanuel Moult, 30 September 1891, Public Records Office PL31/567-64484.
9. McKellen vs Billcliff, 14 April1888, Public Records Office PL31/562-64484.
10. McKellen vs Thornton Pickard Manufg. Co, 14 April 1888, Public Records Office PL31/562.
11. References to Samuel's contribution to the Single Reflex Lens may be found in the following: Coe, Brian, *Cameras. From Daguerreotype to Instant Pictures;* Gernsheim, Helmut, The History of Photography: From the Camera Obscura to the Beginning of the Modern Era; Davies, David A, 'The Manchester Camera Makers' *op cit*; Licco Artistico Stale Navara (an website, in Italian) www.fausernetnavarait/lartist/fotograf/fotocame.htm.
12. *British Journal Photographic Almanac 1896; British Journal Photographic Almanac* 1897, advertisement.
13. *British Journal of Photography*, 17 March 1899.
14. McKellen Limited, 5 January 1899, Public Records Office BT31/8290/60196 55137.
15. British Journal of Photography, 3 August 1900.
16. *Ibid,* 16 August 1901.
17. *Ibid,* 13 September 1901.

Acknowledgments

Many people have assisted me in this project, some of them going far beyond my original request or inquiry to provide invaluable information and guidance. I would like to thank particularly the following who made this project possible.

Colin Harding of the National Museum of Photography and Television, Bradford, was the first person to send me material (the

centrepiece being the manual for the Treble Patent Camera); he also referred me to other key people and resources. Audrey Linkman of the Documentary Photography Archive, Manchester amazed me by sending references to Samuel which she had compiled during earlier research in nineteenth century magazines and journals; she personally took me and my wife on a walking tour of the Manchester areas in which Samuel operated and also suggested books and resources concerning life in Manchester during the relevant period.

Michael Dunn, co-author (with Norman Channing) of *British Camera Makers: An A-Z Guide to Companies and Products*, rescued me more than once when I was floundering among my notes by providing information which helped me make some reasonable connections between Samuel's public and private life. Jenny Wetton of the Museum of Science in Manchester enabled my wife and I to see the larger version of the Treble Patent camera held in storage at the Museum. Dr Robert Leggat, who enthusiastically added information to his internet website 'A History of Photography' and helped me answer a variety of questions. Robert White, author of *Discovering Old Cameras* 1839-1939, was very helpful in providing insights into photographic business practices of the period. Steve Van Dulken, of the British Library, London, was extremely generous in assisting with patent searches and history. Michael Pritchard, after providing me with some very useful material, suggested that I might write this article for his publication, as he thought it might be of some interest to the readers of this magazine. Over three years he advised, encouraged, and patiently waited. Regarding Samuel's personal life, the prime source of information was an extensive family tree compiled by Derek Parker McKellen. A taped interview with my father before his death in 1966 supplied information, tangible and less so, which could never be obtained elsewhere. Thomas Moult's semi-autobiographical novel, *Saturday Night* (published 1931), provided clues which have been the basis for many of my suppositions. Although there are a considerable number of descendants of James McKellen (Samuel's father), to my knowledge there are few who are aware of Samuel's activities. However, I must thank Pat McKellen, my third cousin, for his willingness to dig among the Manchester census and trade directories and to research and answer many questions long distance.

Also to be thanked are Anthea Nicholls, a cousin on the Moult side, for her input concerning Eliza McKellen's story and for welcoming us to Mellor and Ann Herle, the Mellor historian. Joy McKellen, the daughter of Samuel's son Tom Moult, was able to fill in many blanks in my memory.

And last, but certainly not least, my dear wife Tess who didn't leave when the going got tough, but rather read , pre-edited and typed (many times) my copy.

About the author

McKellen was born and raised in London, England. After finishing an apprenticeship in plasterwork, he entered the music publishing business in 1952. In 1958 he emigrated to the USA to continue his interest in playing and listening to jazz. He retired in 1995 as President of MCA Music Publishing and now lives in Rhinebeck and Brooklyn, New York with his wife, Tess. He welcomes questions, information, and even criticism from readers. Email: matrild@aol.com.

Appendix 1. McKellen's Photographic Patents

S D McKellen

Year	Patent number	Description
1884	319	Tripod mounting on a camera
1884	6688	Folding of the front board of a camera to enable the camera to be folded up
1884	8463	To facilitate the focusing of lenses of different focal lengths via camera rails
1884	16334	Allows horizontal swing on a camera
1885	8722	Roller slide for cameras
1886	899	Method of clamping tripod legs
1886	913	Roller slides for cameras
1886	7951	Method of attaching dark slides or backs to cameras
1888	7432	The use of an inclined mirror to direct a an image on a focusing screen
1888	15454	Camera changing boxes
1889	16778	Camera changing boxes
1890	17527	Tripod stands fastening catch
1893	19304	Camera changing boxes
1898	7232	Shutter mechanism [for detective hand cameras]
1898	22142	Roller blind shutters
1899	14743	Camera changing boxes used in conjunction with mirror for focusing
1899	23515	Camera changing boxes
1900	5096	Shutters
1900	7009	Roller blind shutters
1904	5327	Camera shutters where the focus is adjusted by means of an inclined mirror
1904	8132	Magazine camera where the plates are held after exposure by a gripping device
1904	14458	Camera shutters for reflector hand cameras

J D McKellen

1888	15454	with J D McKellen
1893	19304	with J D McKellen
1898	7232	with J D McKellen
1898	14317	Camera changing boxes
1898	22142	with J D McKellen

Tyler & England Bros

1904	8132	with J D McKellen

In addition to those patents noted above there were other preliminary patent applications that never succeeded in being sealed: 1042 (1884); 9417 (1884/86); 9779 (1885); 14723 (1886); 16803 (1890) with Eliza McKellen); 2288 (1893); 9890 (1894); 11197 (1895); 27768 (1905) with Arthur James Gray).